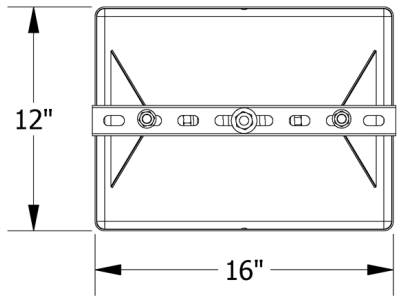

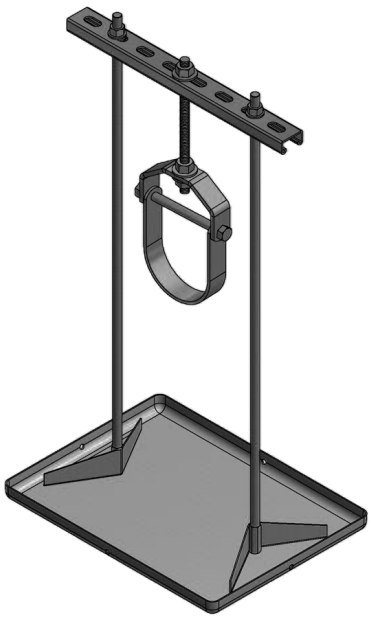

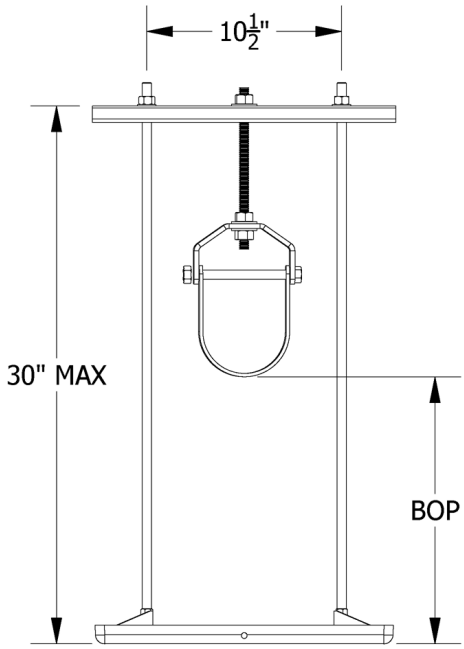

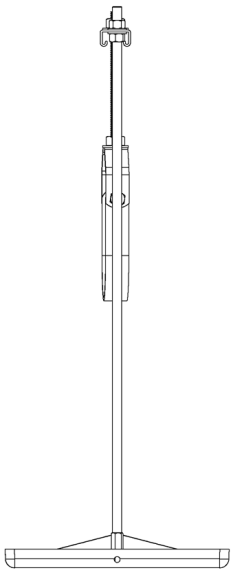

This document, attachments, and all of the information therein are the property of MIRO Industries, Inc. The information contained is loaned, subject to return upon demand, and is not to be used directly or indirectly in any way detrimental to our interest. Further, the information contained therein shall not be used, in whole or in part, except when allowed by written authorization from MIRO Industries, Inc.

Copyright MIRO Industries, Inc. 2003–2012.

Model 5-SB-H HDG